1

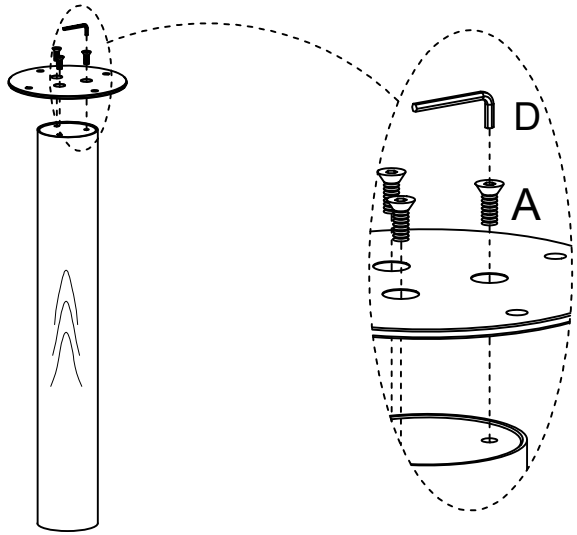

2

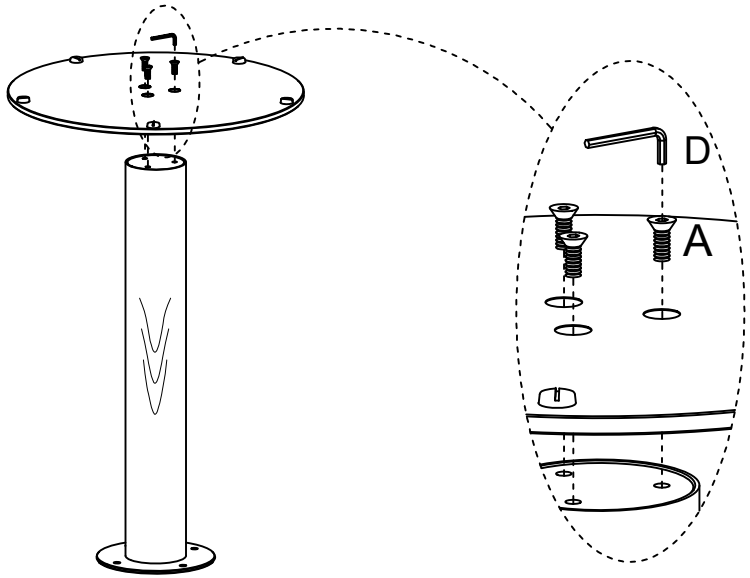

3

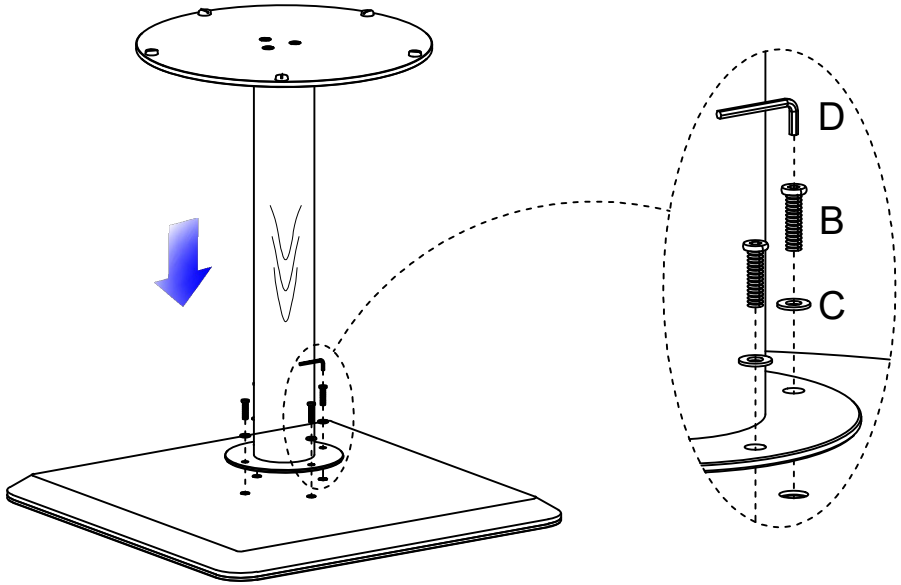

4

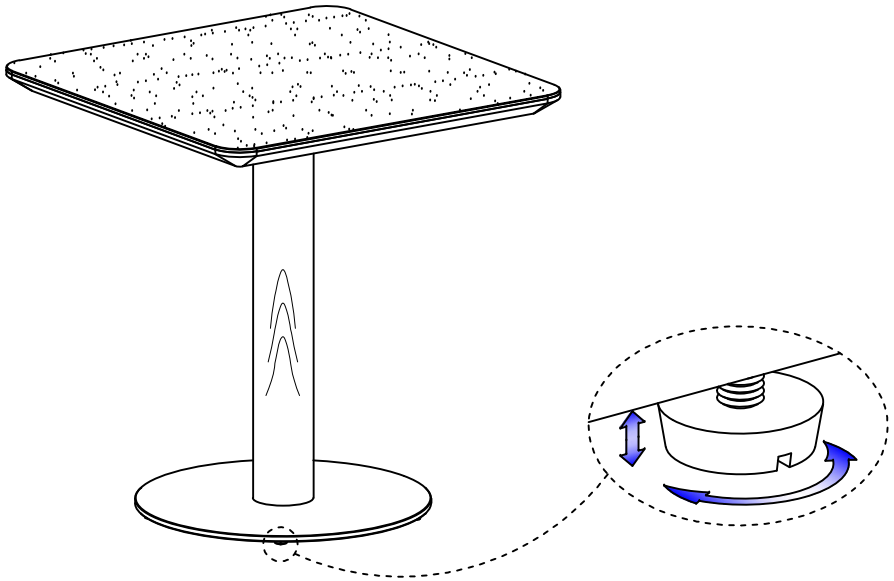

Richmond
INTERIORS

216182

A	B	C	D
M8*25/5MM	M8*30/5MM	φ17*φ8*1.5	M5
6PCS	4PCS	4PCS	1PC

CERAMIC

Care & Maintenance Instructions

Clean spills immediately

Avoid harsh chemicals

Use soft materials

Protect from heat and moisture

Dust regularly

Seal periodically

Prevent heavy impact

Indoor use only

Scratch sensitivity

By following these simple steps, your ceramic furniture will remain elegant and well-maintained for years to come.

Richmond
INTERIORS

OAK VENEER

Care & Maintenance Instructions

Clean spills immediately
Oak veneer is a thin layer of real oak wood applied to a core material such as plywood or MDF. If spills occur, blot immediately with a soft cloth to prevent absorption. Avoid rubbing, as this may spread the liquid.

Avoid harsh chemicals
Do not use acidic or abrasive cleaners like ammonia or strong solvents. Stick to mild, non-abrasive cleaning products.

Use soft materials
Clean with a soft microfiber cloth. For stubborn stains, use a mixture of equal parts vinegar and water, then rinse with a damp cloth and dry thoroughly.

Protect from heat and moisture
Use coasters or heat-resistant mats under hot items. Avoid placing wet or damp objects directly on the veneer.

Dust regularly
Wipe with a soft, lint-free cloth to prevent dust buildup and scratches.

Seal periodically
Oak veneered tabletops come pre-sealed. Depending on use, resealing by a professional is recommended.

Prevent heavy impact
Avoid dropping or dragging heavy objects across the surface to prevent dents or damage.

Indoor use only
This product is for indoor use. Outdoor exposure can cause damage.

Scratch sensitivity
Use placemats or tablecloths to protect against scratches. Avoid sharp or heavy items on the surface.

By following these simple steps, your oak veneer furniture will remain beautiful and well-maintained for years to come.

Richmond
INTERIORS